# SATELLITE & OPTICAL COMMUNICATION – BEC515D

# MODULE-2

# SATELLITE SUBSYSTEM

Irrespective of the intended application, be it a communications satellite or a weather forecasting satellite or even a remote sensing satellite, different subsystems comprising a typical satellite include the following:

1. Mechanical structure
2. Propulsion subsystem
3. Thermal control subsystem
4. Power supply subsystem
5. Telemetry, tracking and command (TT&C) subsystem
6. Attitude and orbit control subsystem
7. Payload subsystem
8. Antenna subsystem

## 2.1 Power supply subsystem

Thepowersupplysubsystemgenerates,stores,controlsanddistributeselectricalpowertoother subsystems on board the satellite platform. The electrical power needs of a satellite depend upon the intended mission of the spacecraft and the payloads that it carries along with it in ordertocarry outthemissionobjectives.Thepowerrequirementcanvaryfromafewhundreds of watts to tens of kilowatts.

### 2.1.1 Types of Power System

Although power systems for satellite applications have been developed based on the use of solar energy, chemical energy and nuclear energy, the solar energy driven power systems are undoubtedly the favourite and are the most commonly used ones. This is due to abundance of mostly uninterrupted solar energy available in the space environment. Here reference is beingmade to the use of photon energy in solar radiation. The radiant flux available at the Earth's orbit is about 1370W/m2.

There are power systems known as heat generators that make use of heat energy in solar radiation to generate electricity. A parabolic dish of mirrors reflects heat energy of solar radiation through a boiler, which in turn feeds a generator, thus converting solar energy into electrical power. This mode of generating power is completely renewable and efficient if the satelliteremainsexposedtosolarradiation.Itcanalsobeusedinconjunctionwithrechargeable

batteries.Heatgenerators,however,areverylargeandheavyandarethusappropriateonlyfor large satellites.

Batteries store electricity in the form of chemical energy and are invariably used together withsolarenergydrivenelectricalpowergeneratorstomeettheunint erupted electricalpower requirementsofthesatellite.Theyareneverusedasthesolemediumofsupplyingtheelectrical powerneedsofthesatellite.

Thebatteriesusedherearerechargeablebatteriesthatarecharged during the period when solar radiation is falling on the satellite. During the periods of eclipse when solar radiation fails to reach the satellite, the batteries supply electrical power to the satellite.

### 2.1.2 Solar Energy Driven Power Systems

Intheparagraphstofollow,asolarenergydrivenpowersystemforasatellitewillbediscussed at length. Solar energy will mean the photon energy of the solar radiation unless otherwise specified.

The major components of a solar power system are the solar panels (of which the solar cell is the basic element), rechargeable batteries, battery chargers with inbuilt controllers, regulatorsandinverterstogeneratevariousd.canda.cvoltagesrequiredbyvarious subsystems. Fig.2.1 shows the basic block schematic arrangement of a regulated bus power supply system. The diagram is self-explanatory. Major components like the solar panels and the batteries are briefly described in the following paragraphs. During the sunlight condition, the voltage of the solar generator and also the bus is maintained at constant amplitude with the voltage regulator connected across the solar generator.

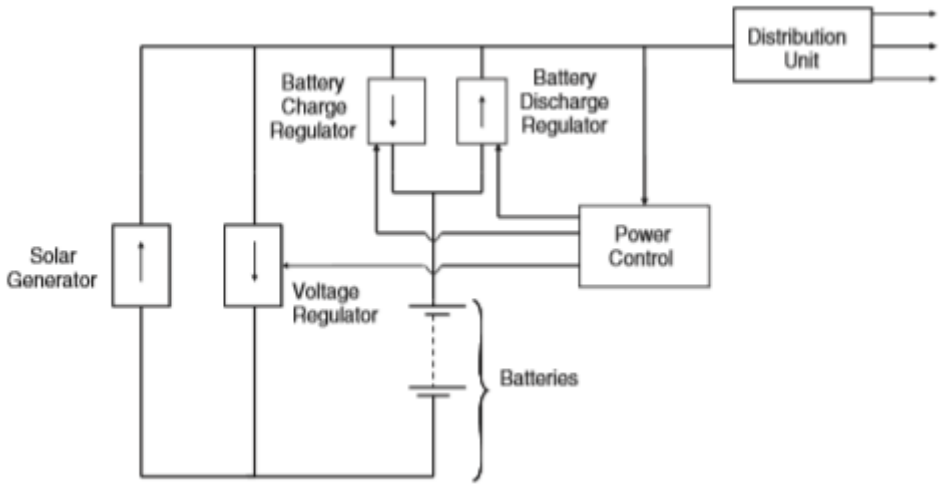


**Fig.2.1 Basic block schematic arrangement of a regulated bus power supply system**

#### 2.1.2.1 Solar panels

The solar panel is nothing but a series and parallel connection of a large number of solar cells. Fig.2.2 (a) shows this series–parallel arrangement of solar cells and Fig.2.2 (b) shows the image of a solar panel.

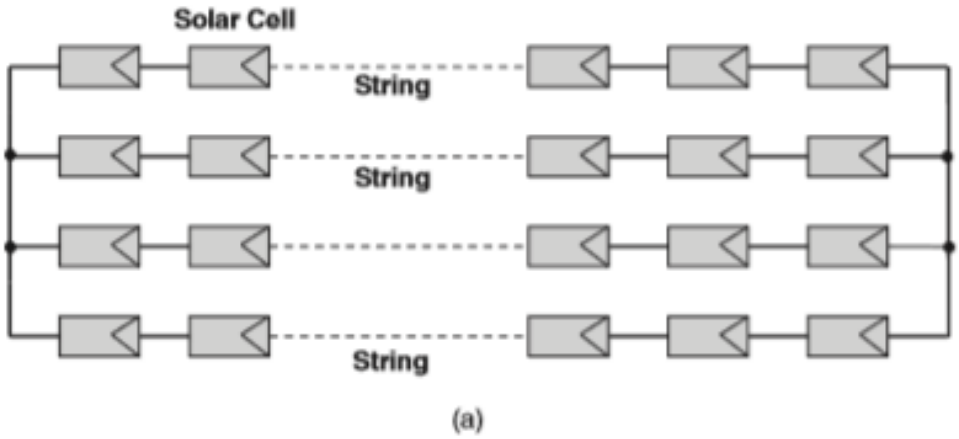


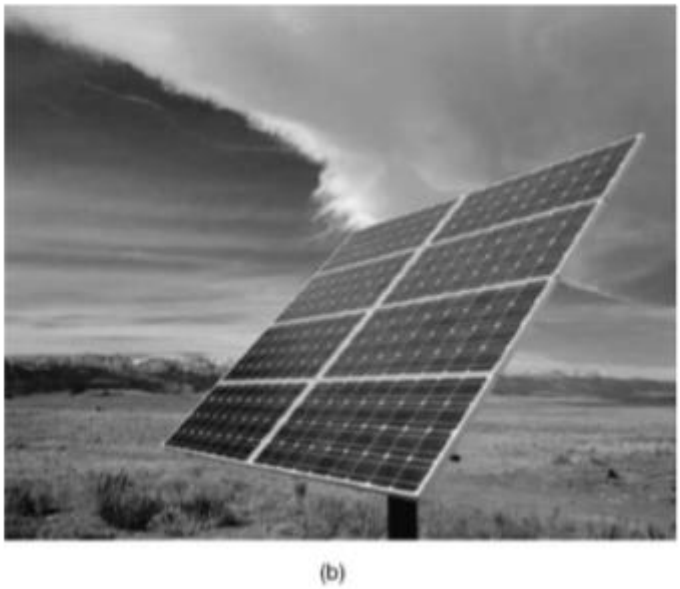


**Fig.2.2 (a) Series–parallel arrangement of solar cells and (b) solar panel**

The voltage output and the current delivering capability of an individual solar cell are very small for it to be of any use as an electrical power input to anysatellitesubsystem.Theseries–parallelarrangementisemployedtogetthedesiredoutput voltagewiththerequiredpowerdeliverycapability.Alargesurfaceareaisthereforeneededin ordertoproducetherequiredamountofpower.Theneedforlargesolarpanelsmust,however, be balanced against the need for the entire satellite to be as small and lightweight as possible. The three-axis body stabilized satellites use flat solar panels (Fig.2.3)Whereas spinstabilized satellites use cylindrical solar panels (Fig.2.4).Both types have their own advantages and disadvantages. In the case of three-axis stabilized satellites, the flat solar

panels can be rotated to intercept maximum solar energy to produce maximum electric power.

**Fig.2.3 Flat solar panels used on three-axis stabilized satellites**

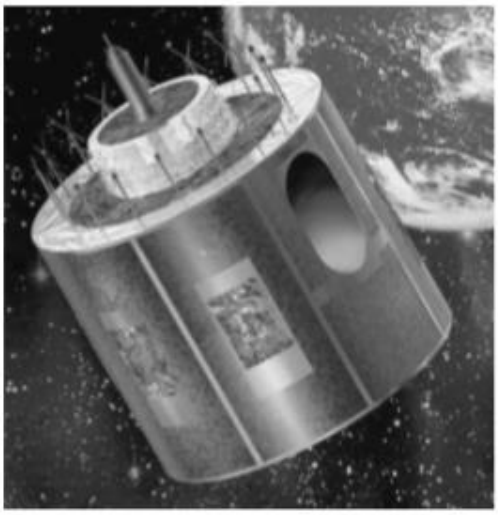

**Fig.2.4 Cylindrical solar panels used on spin-stabilized satellites**

For example,15footlongsolarpanelsonIntelsat-Vseriessatellitesproduceinexcessof1.2kWof power. However, as the solar panels always face the sun, they operate at relatively higher temperatures and thus reduced efficiency as compared to solar panels on spin-stabilized satellites, where the cells can cool down when in shadow. Ontheotherhand,inthecaseofspin-stabilizedsatellites,suchasIntelsat-VIseriessatellites, only one-third of the solar cells face the sun at a time and hence greater numbers of cells are needed to get the desired power, which in turn leads to an increase in the mass of the satellite. This disadvantage is, however, partially offset by reduction in the satellite mass due to use of a relatively simpler thermal control system and attitude control system in the case of spinstabilized satellites. It may be mentioned here that in the case of newer satellites requiring more power, the balance may tilt in favour of three-axis stabilized satellites.

### 2.1.2.2 Principle of Operation of a Solar Cell

The operational principle of the basic solar cell is based on the photovoltaic effect. According to the photovoltaic effect, there is generation of an open circuit voltage across a P–N junction when it is exposed to light, which is the solar radiation in the case of a solar cell.This opencircuit voltage leads to flow of electric current through a load resistance connected across it, as shown in Fig.2.5.

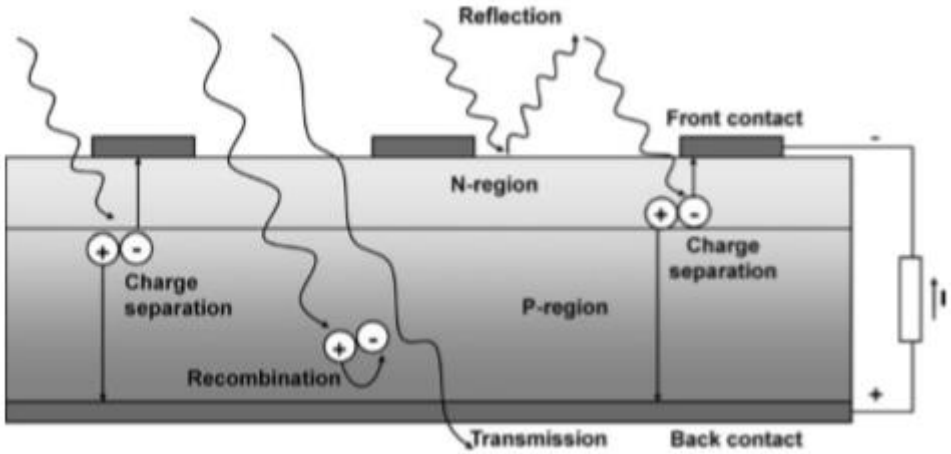


**Fig.2.5 Principle of operation of a solar cell**

It is evident from the figure that the impinging photon energy leads to the generation of electron–holepairs.Theelectron–holepairseitherrecombineandvanishorstarttodriftinthe opposite directions, with electrons moving towards the N-layer and holes moving towards the P-layer.Thisaccumulationofpositiveandnegativechargecarriersconstitutestheopencircuit voltage. As mentioned before, this voltage can cause a current to flow through an external load. When the junction is shorted, the result is a short circuit current whose magnitude is proportional to the incident light intensity.

### 2.1.3 Batteries

Batteriesareusedonboardthesatellitetomeetthepowerrequirementswhenthesamecannot be provided by solar panels, as is the case during eclipse periods. Rechargeable batteries are almost invariably used for the purpose. These are charged during the period when the solar radiation is available to the satellite's solar panels and then employed during eclipse periods or to meet a short term peak power requirements. Batteries are also used during the launch phase, before the solar panels are deployed. The choice of the right battery technology for a given satellite mission is governed by various factors. These include the frequency of use, magnitude of load and depth of discharge. Generally, fewer cycles of use and less charge demanded on each cycle lead to a longer battery life. The choice of battery technology is closely related to the satellite orbit. Batteries used on board low Earth orbit satellites encounter much larger number of charge/discharge cyclesascomparedtobatteriesonboardgeostationarysatellites.LEOsatelliteshaveanorbitalperiod of the order of 100 min and the eclipse period is 30–40min per orbit. ForGEO satellites, the orbital period is 24 hours and the eclipse duration varies from 0 to a maximum of 72 min during equinoxes. Batteries on LEO satellites are therefore subjected

to a lower depth of discharge. On the other hand, batteries on geostationary satellites are subjected to a greater depth of discharge. The batteries for LEO satellites have typical DoD of 40% whereas those for GEO satellites have a typical DoD of 80%. One of the major points during battery design is that their capacity is highly dependent on the temperature. As an example, the nickel metal hydride (NiMH) battery has a maximum capacity between the operating temperature of 10 to 15◦C and its capacity decreases at a rate of 1Ah/◦C outside this range. Commonly used batteries onboard satellites are the nickel–cadmium (NiCd), nickel metal hydride (NiMH) and nickel–hydrogen (NiH2) batteries. These have specific energy specifications of 20–30 W h/kg (in the case of NiCd batteries), 35–55 W h/kg (in the case of NiMH and NiH2 batteries) and 70–110 Wh/kg (in case of Li Ion batteries). Small satellites in low Earth orbits mostly employ nickel–cadmium batteries. Nickel–hydrogen batteries are slowly replacing these because of their higher specific energy and longer life expectancy. Currently, GEO satellites mostly employ nickel–hydrogen batteries. Lithium ion batteries are the battery of the future and can be used on LEO, MEO and GEO satellites. Each of these battery types is briefly described in the following paragraphs

**2.1.3.1Nickel–cadmium Batteries**

Thenickel–cadmiumbatteryisthemostcommonlyusedrechargeablebattery,particularlyfor household appliances. The basic galvanic cell in a nickel–cadmium battery uses a cadmium anode, a nickel hydroxide cathode and an alkaline electrolyte. It may be mentioned here that the anode is the electrode at which oxidation takes place and the cathode is the electrode that is reduced. In the case of a rechargeable battery, the negative electrode is the anode and the positive electrode is the cathode while discharging. They can offer high currents at a constant voltageof1.2V.However,theyarehighlypronetowhatiscalledthe‘memoryeffect’.Memory effect means that if a battery is only partially discharged before recharging repeatedly, it canforget that it can be further discharged. If not prevented, it can reduce the battery’s lifetime. The best way to prevent this situation is to fully charge and discharge the battery on a regular basis. The other problem with this battery is the toxicity of cadmium, as a result of which it needs to be recycled or disposed of properly. Also, nickel–cadmium batteries have a lower energy per mass ratio as compared to nickel metal hydride and nickel–hydrogen batteries. This means that, for a given battery capacity, nickel-cadmium batteries are relatively heavier as compared to nickel metal hydride and nickel–hydrogen batteries. Nickel metal hydride and nickel hydrogen batteries have more or less completely replaced nickel cadmium batteries in most applications. Nickel–cadmium

batteries are mostly used on LEO satellites (having an orbital period of 100minandaneclipseperiodof30–40minperorbit)duetotheirrobustnessversuscyclenumbers.TheywereusedonGEOsatellitesin the1960sand1970s,butnowhavebeenreplacedby nickel–hydrogenbatteries.Someofthesatellitesemployingnickel–cadmiumbatteriesinclude SPOTsatellites. Fig.2.6 showsthebatterypackonboardtheSPOT-4satellite.Itcomprises fourbatterieseachconsistingof24nickel–cadmiumaccumulators,storing40Ahandweighing almost45kg.TheaveragepowerconsumptionofSPOT-4satelliteis1kW.

**Fig.2.6 Nickel-cadmium battery pack used on SPOT-4 satellite**

### 2.1.3.2 Nickel–hydrogen Batteries

Thenickel–hydrogenbatterycombinesthetechnologiesofbatteriesandfuelcells.Thebattery uses nickel hydroxide as the cathode as in the nickel–cadmium cell. Like the hydrogen–oxygen fuel cell, the battery uses hydrogen as the active element in the anode. The battery is characterized by a high specific energy (in excess of 50 W h/kg), high power density and high cyclic stability (greater than 5000 cycles). Its resistance to repeated deep discharge and tolerance for overcharge makes it the chosen battery in many aerospace applications, especially for geosynchronous and low Earth orbit satellites. Its disadvantages include its high cost and low volumetric energy density. Nickel-hydrogen batteries are being used on both LEO and GEO satellites. The batteries for LEOs have a typical depth-of-discharge (DoD) of 40% whereas those for GEO applications have atypical DoD of 80%. Some satellites using these batteries include Arabsat-2, Arabsat-3, Hispasat-1C, INSAT-3, Intelsat-7, Intelsat-7A, MTSat(multifunctionaltransportsatellite),NStar,Superbird,Thaicom,etc. Fig.2.7 shows nickel–hydrogen batteries that have been flown on board many satellites.

**Fig.2.7 Nickel–hydrogen batteries.**

### 2.1.3.3 Lithium Ion Battery

Lithium ion batteries produce the same energy as nickel metal hydride batteries but weigh approximately 30% less. These batteries do not suffer from the memory effect unlike their nickel–cadmium and nickel metal hydride counterparts. These batteries however, requirespecial handling as lithium ignites very easily. They can be used for LEO, MEO as well as GEO satellites.

## 2.2 Attitude and Orbit Control

Theattitudeandorbitcontrolsubsystemperformstwinfunctionsofcontrollingtheorbitalpath, which is required to ensure that the satellite is in the correct location in space to provide the intendedservicesandtoprovideattitudecontrol,whichisessentialtopreventthesatellitefromtumblinginspace. Inaddition,italsoensuresthattheantennaremainpointedatafixedpoint on the Earth's surface. The requirements on the attitude and orbit control subsystem differ during the launch phase and the operational phase of the satellite.

### 2.2.1 Attitude Control

Attitude of a satellite, or for that matter any space vehicle, is its orientation as determined by the relationship between its axes (yaw, pitch and roll) and some reference plane. The attitude control subsystem is used to maintain a certain attitude of the satellite, both when it ismovinginitsorbitandalsoduringitslaunchphase.Asmentionedinthepreviouschapter,two types of attitude control systems are in common use, namely spin stabilization and three-axis stabilization.Duringthelaunchphase,theattitudecontrolsystemmaintainsthecorrectattitude of the satellite so that it is able to maintain link with the ground Earth station and controls its orientationsuchthatthesatelliteisinthecorrectdirectionforanorbitalmanoeuvre.Whenthe

satellite is in orbit, the attitude control system maintains the antenna of the satellite pointed accurately in the desired direction. The precision with which the attitude needs to be controlled depends on the satellite antenna beam width. Spot beams and shaped beams require more precise attitude control as compared to Earth coverage or regional coverage antennas. Attitude control in spin stabilized satellites requires pitch correction only on the de-spun antenna system and can be obtained by varying the speed of the spin motor. Yaw and roll are controlled by pulsing radially mounted jets at appropriate intervals of time. In the case of three-axis stabilized satellites, the speed of the inertia wheel needs to be controlled. For satellites orbiting in low Earth and medium Earth orbits, the gravitational pull from the Earth is very strong. These satellites often use a long pole referred to as the gravity gradient boom, pointing towards the centre of the Earth. This pole dampens the oscillations in the direction towards the centre of the Earth from the satellite by virtue of the difference in the gravitational field between the top and the bottom of the pole. Attitude control systems can be either passive or active. Passive systems maintain the satellite attitude by obtaining equilibrium at the desired orientation. There is no feedback mechanism to check the orientation of the satellite. Active control maintains the satellite attitude by sensing its orientation along the three axes and making corrections based on these measurements. The basic active attitude control system has three components: one that senses the current attitude of the platform, second that computes the deviations in the current attitude from the desired attitude and third that controls and corrects the computed errors. Sensors are used to determine the position of the satellite axis with respect to specified reference directions (commonly used reference directions are Earth, sun or a star). Earth sensors sense infrared emissions from Earth and are used for maintaining the roll and the pitch axis. Sun and star sensors are generally used to measure the error in the yaw axis. The error between the current attitude and the desired attitude is computed and a correction torque is generated in proportion to the sensed error.

### 2.2.2 Orbit Control

Orbit control is required in order to correct for the effects of perturbation forces. These perturbation forces may alter one or more of the orbital parameters. The orbit control subsystem provides correction of these undesired changes. This is usually done by firing thrusters. During

thelaunchphase,theorbitcontrolsystemisusedtoaffectsomeofthemajororbitmanoeuvres and to move the satellite to the desired location.

Inthecaseofgeostationarysatellites,theinclinationoftheorbitincreasesatanaveragerate of about 0.85◦ per year. In general, the geostationary satellites have to remain within a block of±0.05◦ or so. The east-west and north-south station keeping manoeuvres are carried out at intervals of two weeks each. North-south manoeuvres require more fuel to be expended than any other orbital correction. In the case of non-circular orbits, the velocity of the satellite needs to be increased or decreasedonacontinuousbasis.Thisisdonebyimpartingcorrectionsinthedirectiontangential to the axis lying in the orbital plane. In a spin stabilized satellite, radial jets are fired in this direction whereas in the case of three-axis stabilized satellites, two pairs of X-axis jets acting in opposite directions are used.

## 2.3Tracking, Telemetry and Command Subsystem

The tracking, telemetry and command (TT&C) subsystem monitors and controls the satellite right from the lift-off stage to the end of its operational life in space. The tracking part of the subsystem determines the position of the spacecraft and follows its travel using angle, range and velocity information. The telemetry part gathers information on the health of various subsystems of the satellite. It encodes this information and then transmits the same towards the Earth control centre. The command element receives and executes remote control commands fromthecontrolcentreonEarthtoeffectchangestotheplatformfunctions, configuration,position and velocity. The TT&C subsystem is therefore very important, not only during orbital injectionandthepositioningphasebutalso throughout theoperationallifeofthesatellite.

Fig.2.8 shows the block schematic arrangement of the basic TT&C subsystem. Tracking,asmentionedearlier,isusedtodeterminetheorbitalparametersofthesatelliteonaregular basis. This helps in maintaining the satellite in the desired orbit and in providing look-angle informationtotheEarthstations.Angletrackingcan,forinstance,beusedtodeterminetheazimuthandelevationanglesfromtheEarthstation.Thetimeintervalmeasurementtechniquecan beusedforthepurposeofrangingbysendingasignalviathecommandlinkandgettingareturn via the telemetry link. The rate of change of range can be determined either by measuring the phaseshiftofthereturnsignalascomparedtothatofthetransmittedsignalorbyusingapseudorandomcodemodulationandthecorrelationbetweenthetransmittedandthereceivedsignals.

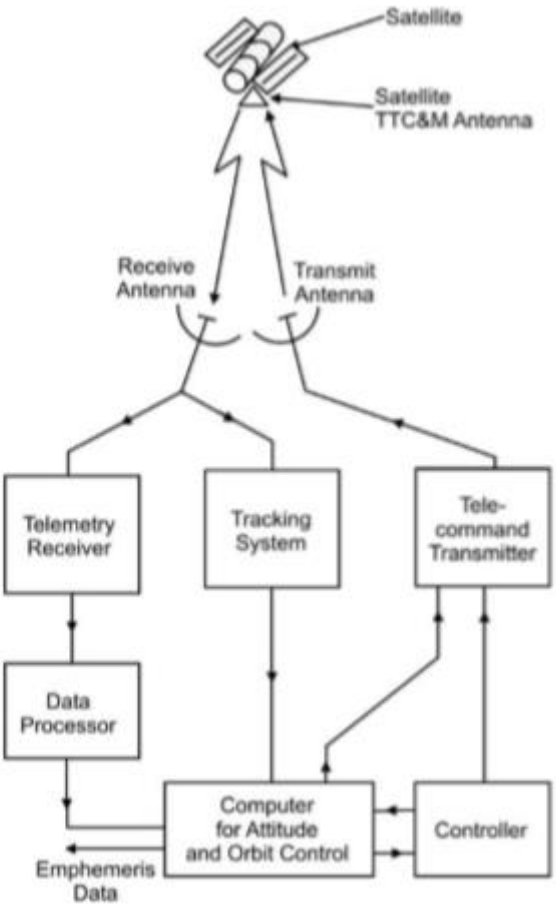


**Fig.2.8 Block schematic arrangement of the basic TT&C subsystem**

## 2.4Payload

Payloadisthemostimportantsubsystemofanysatellite.Payloadcanbeconsideredasthebrain of the satellite that performs its intended function. The payload carried by a satellite depends upon the mission requirements. The basic payload in the case of a communication satellite,

forinstance,isatransponder,whichactsasareceiver/amplifier/transmitter.Atranspondercan be considered to be a microwave relay channel that also performs the function of frequency translation from the uplink frequency to the relatively lower downlink frequency.

# EARTH STATION

## 2.5 Types of earth station

Earth stations are generally categorized on the basis of type of services or functions provided by them though they may sometimes be classified according to the size of the dish antenna. BasedonthetypeofserviceprovidedbytheEarthstation,theyareclassifiedintothefollowing three broad categories.

### 2.5.1 Fixed Satellite Service (FSS) Earth Stations

**Fig.2. Large Earth station**

**Fig.2. Very Small terminal (Transmit/Receive)**

### 2.5.2 Broadcast Satellite Service (BSS) Earth Stations

**Fig.2. Very small terminal (Receive only)**

### 2.1.3 Mobile Satellite Service (MSS) Earth Stations.

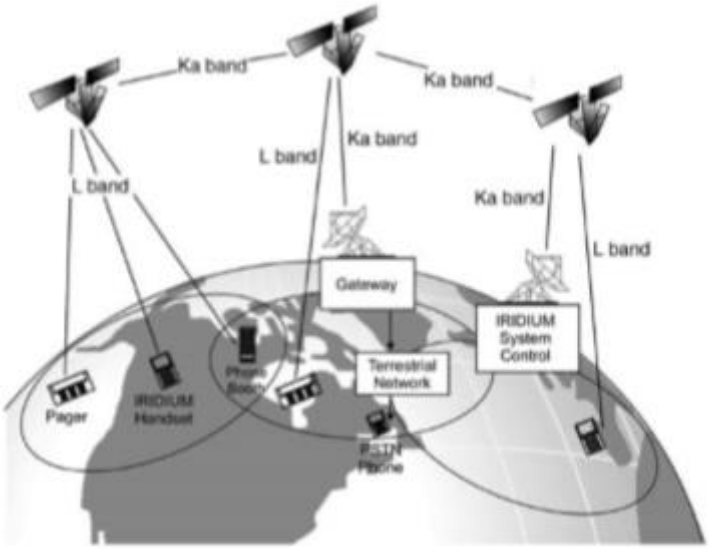


**Fig.2. Iridium system**

Earth stations are also sometimes conveniently categorized into three major functional groups depending upon their usage. These categories are the following.

1. Single function stations
2. Gateway stations
3. Teleports

## 2.2 Architecture

ThemajorcomponentsofanEarthstationincludetheRFsection,thebasebandequipmentand the terrestrial interface. In addition, every Earth station has certain support facilities such as

power supply unit with adequate back-up, monitoring and control equipment and thermal and environment conditioning unit.

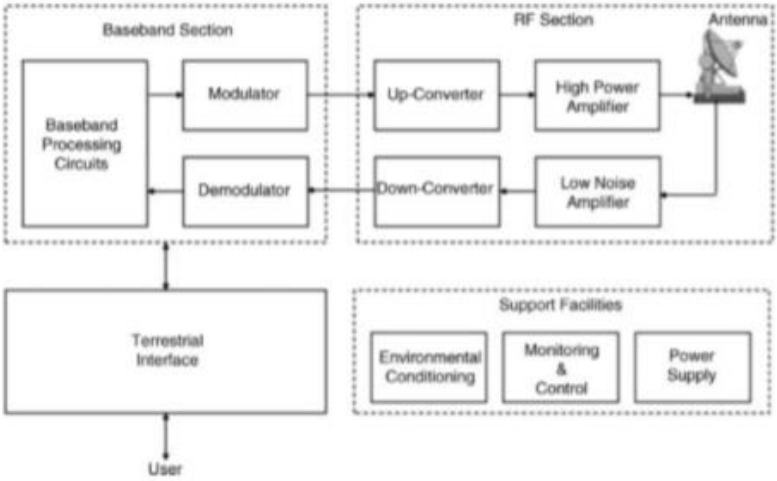


**Fig.2. Block schematic arrangement of a generalized Earth station**

## 2.3 Design considerations

DesignofanEarthstationisgenerallyatwo-stepprocess.Thefirststepinvolvesidentification of Earth station requirement specifications, which in turn govern the choice of system parameters.

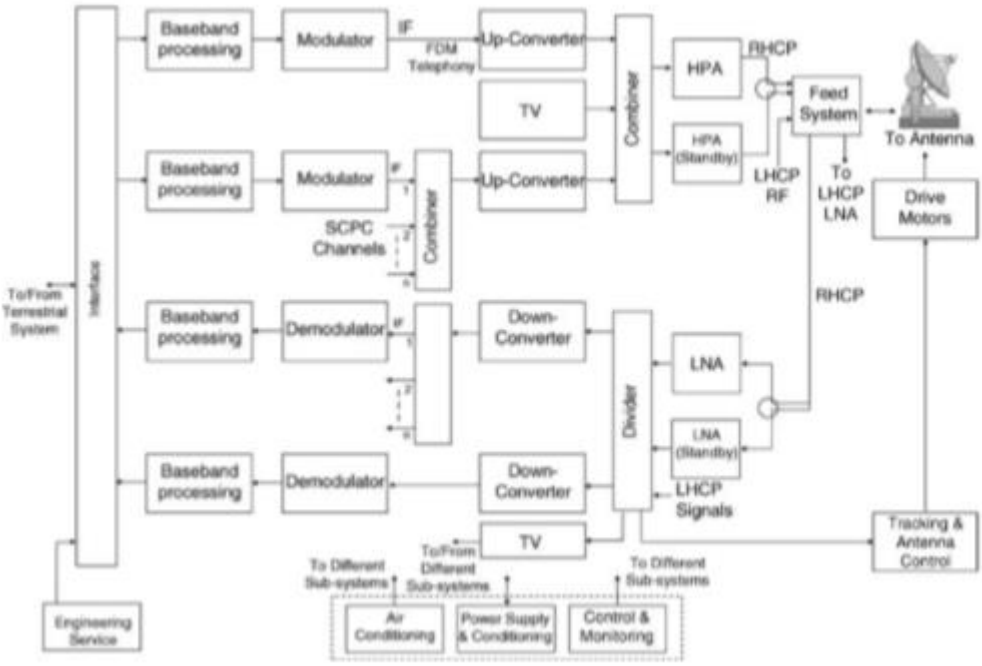


Fig.2. Block schematic of a typical large FSS Earth station

The second step is about identifying the most cost effective architecture that achieves the desired specifications. Requirement specifications affecting the design of an Earth station

include type of service offered (Fixed satellite service, Broadcastsatellite service or Mobile satellite service), communication requirements (telephony, data, television etc.), required base band quality at the destination, system capacity and reliability.

## 2.4 Testing

HavingchosentheEarthstationequipment,itisimportanttoensurethattheequipmentwould not only meet the specified requirements of the intended Earth station; it is also necessary to ensurethattheEarthstationwouldnotcauseanyproblemseithertooth erasers ofthesatellite or to any adjacent satellites. This is achieved by performing different levels of testing, which begins with testing at component or unit level followed up by subsystem level testing.

## 2.5Earth station Hardware

Most Earth station hardware can be categorized into one of the three groups namely RF equipment, IF and baseband equipment and terrestrial interface equipment.

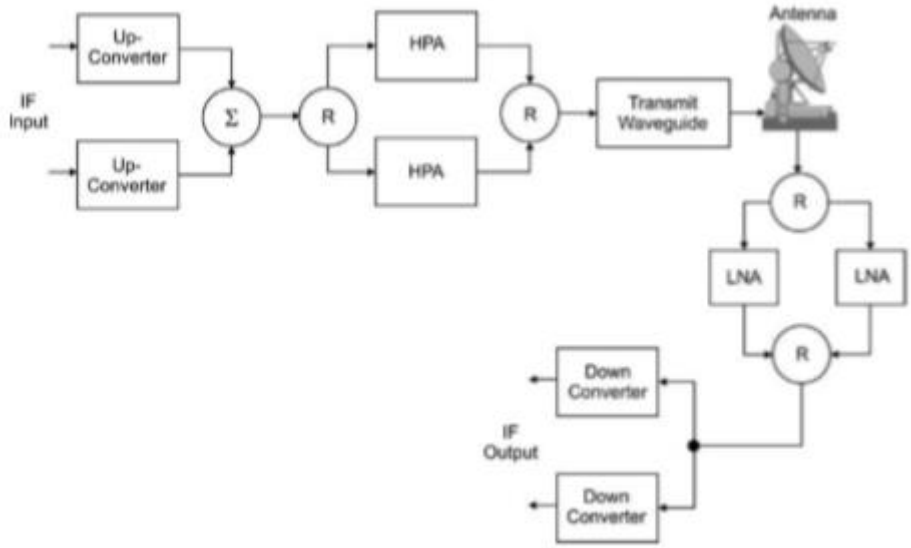


**Fig.2.** Block schematic of the RF portion of the Earth station

## 2.6 Satellite Tracking

The Earth station antenna needs totrack the satellite when the beam width of the antennaisonly marginally wider than the satellite drift seen by it. Given the fact that satellite drift is typically in the range of 0.5–3◦ per day, antennas with large beamwidths such as DBS receivers do not require to track the satellite. On the other hand, large Earth stations do need some form of

trackingwithtrackingaccuracydependinguponthe intendedapplication.Thetasksperformed by the Earth station's satellite tracking system include some or all of the following.

1. Satellite acquisition
2. Manual tracking
3. Automatic tracking
4. Programme tracking